BUBBLE 2

design Sacha LAKIC

rochebobois
PARIS

BUBBLE 2

design Sacha LAKIC

rochebobois PARIS

BUBBLE 2

design Sacha LAKIC

rochebobois PARIS

BUBBLE 2

design Sacha LAKIC

rochebobois PARIS

BUBBLE 2

design Sacha LAKIC

rochebobois PARIS

BUBBLE 2

design Sacha LAKIC

rochebobois PARIS

BUBBLE 2

design Sacha LAKIC

rochebobois PARIS

FICHE TECHNIQUE / TECHNICAL SPECIFICATIONS / FICHA TECNICA:

Structure : Sapin massif, multiplis de pin, panneaux de particules (CARB)
Suspension : Sangles élastiques
Garnissage assise : Mousse polyuréthane Hypersoft bi-densité 35-22 kg/m³
Garnissage dossier : Mousse polyuréthane Hypersoft bi-densité 35-22 kg/m³
Piétement : Hêtre massif verni teinté Wengé

Structure: Solid fir wood, pine plywood, engineered composite wood (CARB)
Suspension: Elastic straps
Seat cushion: Hypersoft bi-density polyurethane foam 35-22 kg/m³
Back cushion: Hypersoft bi-density polyurethane foam 35-22 kg/m³
Base: Solid beech wood with varnish stain finish, col. Wenge

Estructura: Abeto macizo, multilaminado de pino, paneles de partículas (CARB)
Suspensión: Cinchas elásticas
Interior asiento: Espuma poliuretano Hypersoft bi-densidad 35-22 kg/m³
Interior respaldo: Espuma poliuretano Hypersoft bi-densidad 35-22 kg/m³
Patas: Haya maciza barniz tintado Wengué

OBSERVATIONS / OBSERVATIONS / OBSERVACIONES :

- Fabrication Européenne
- Entièrement capitonné
- Modèle réalisable uniquement en tissus Techno 2D, Techno 3D, Techno 4D, Câlin et Orsetto Flex

- Manufactured in Europe
- Entirely padded
- This model can only be upholstered in Techno 2D, Techno 3D, Techno 4D, Câlin and Orsetto Flex fabrics

- Fabricación europea
- Totalmente capitoné
- Modelo realizable únicamente en las telas Techno 2D, Techno 3D, Techno 4, Câlin y Orsetto Flex

BUBBLE 2

design Sacha LAKIC

rochebobois PARIS

38 Canapé 5 places arrondi
5-seat rounded sofa
Sofá 5 plazas redondeado

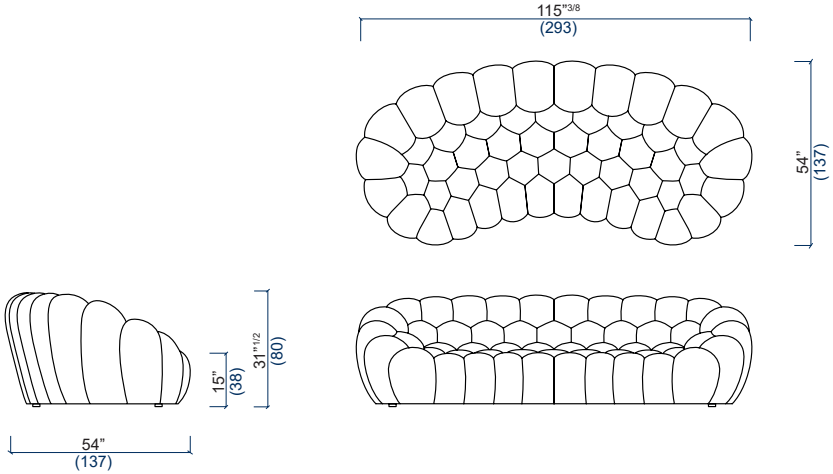

36 Canapé 3-4 places arrondi
3-4-seat rounded sofa
Sofá 3-4 plazas redondeado

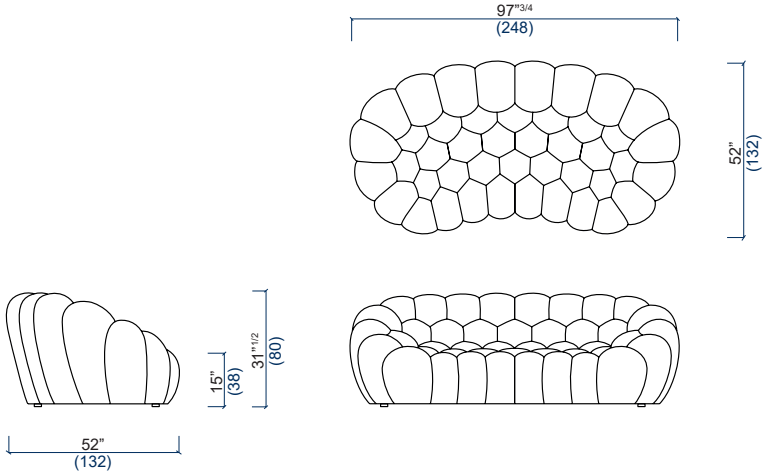

26 Canapé 2,5 places arrondi
2,5-seat rounded sofa
Sofá 2,5 plazas redondeado

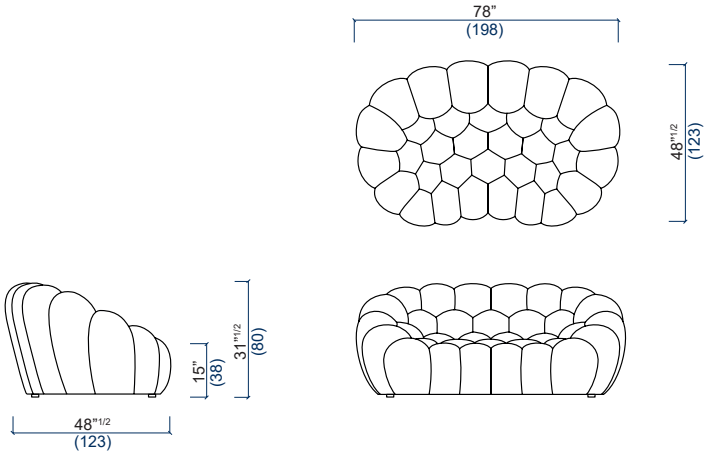

46 Grand pouf
Large ottoman
Gran puf

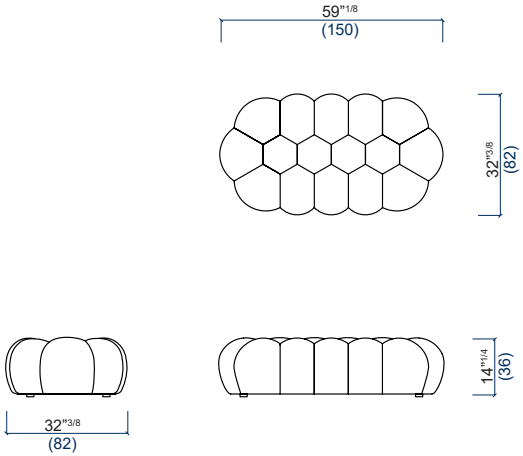
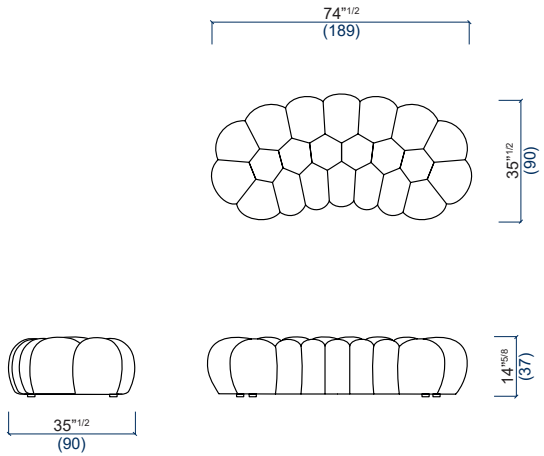
47 Grand pouf arrondi
Large rounded ottoman
Gran puf redondeado